TENT A

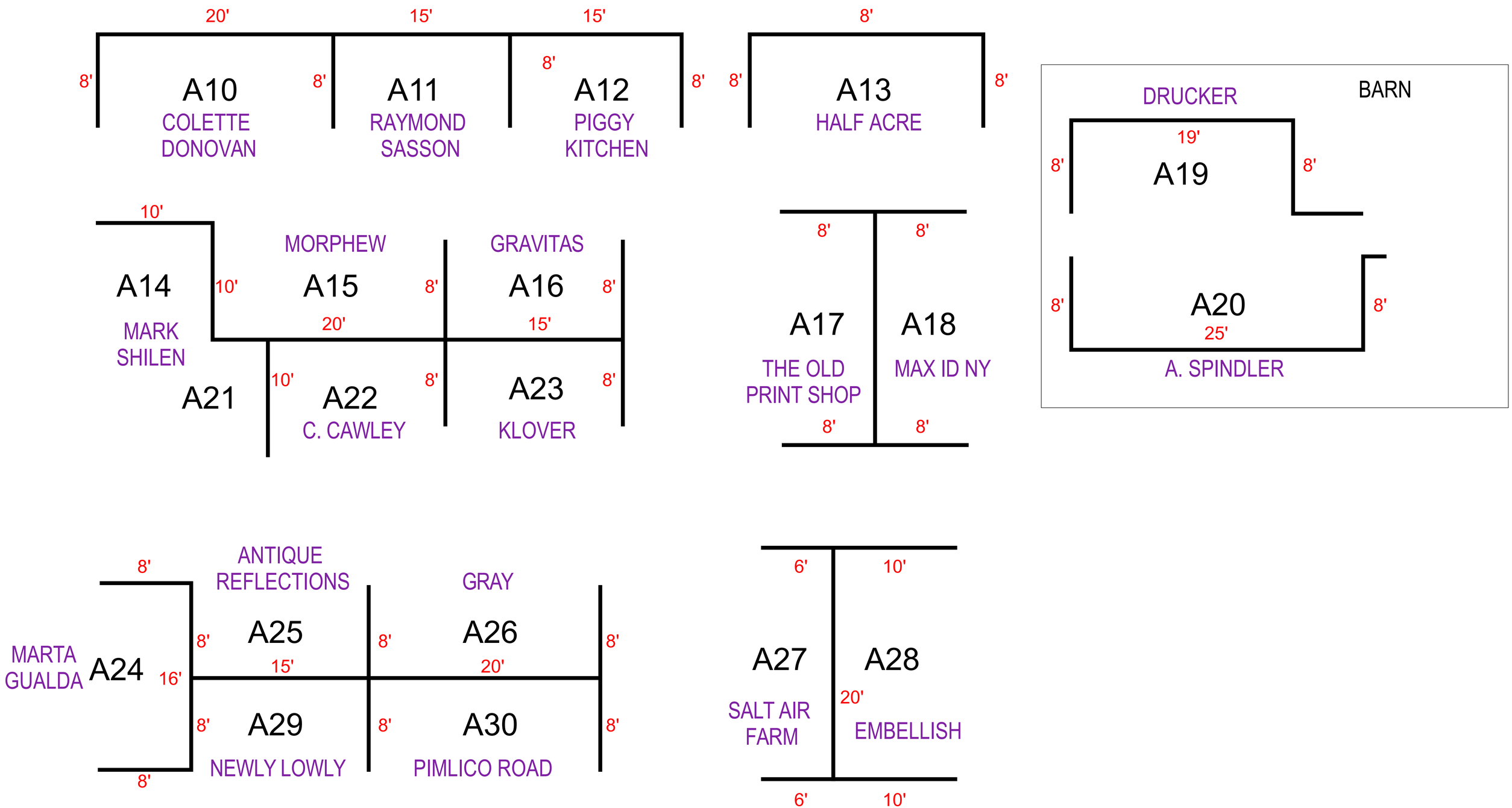
20'
15'
15'
8'
8'
8'
8'
8'
8'
A10
COLETTE DONOVAN
A11
RAYMOND SASSON
A12
PIGGY KITCHEN
A13
HALF ACRE
DRUCKER
BARN
19'
8'
8'
A19
8'
8'
A20
25'
A. SPINDLER
10'
MORPHEW
GRAVITAS
A14
10'
A15
8'
A16
8'
MARK SHILEN
20'
15'
A21
10'
A22
8'
A23
8'
C. CAWLEY
KLOVER
8'
8'
A17
A18
THE OLD PRINT SHOP
MAX ID NY
8'
8'
8'
ANTIQUE REFLECTIONS
GRAY
MARTA GUALDA
A24
16'
8'
A25
8'
A26
8'
15'
20'
8'
A29
8'
A30
8'
NEWLY LOWLY
PIMLICO ROAD
8'
6'
10'
A27
A28
SALT AIR FARM
20'
EMBELLISH
6'
10'